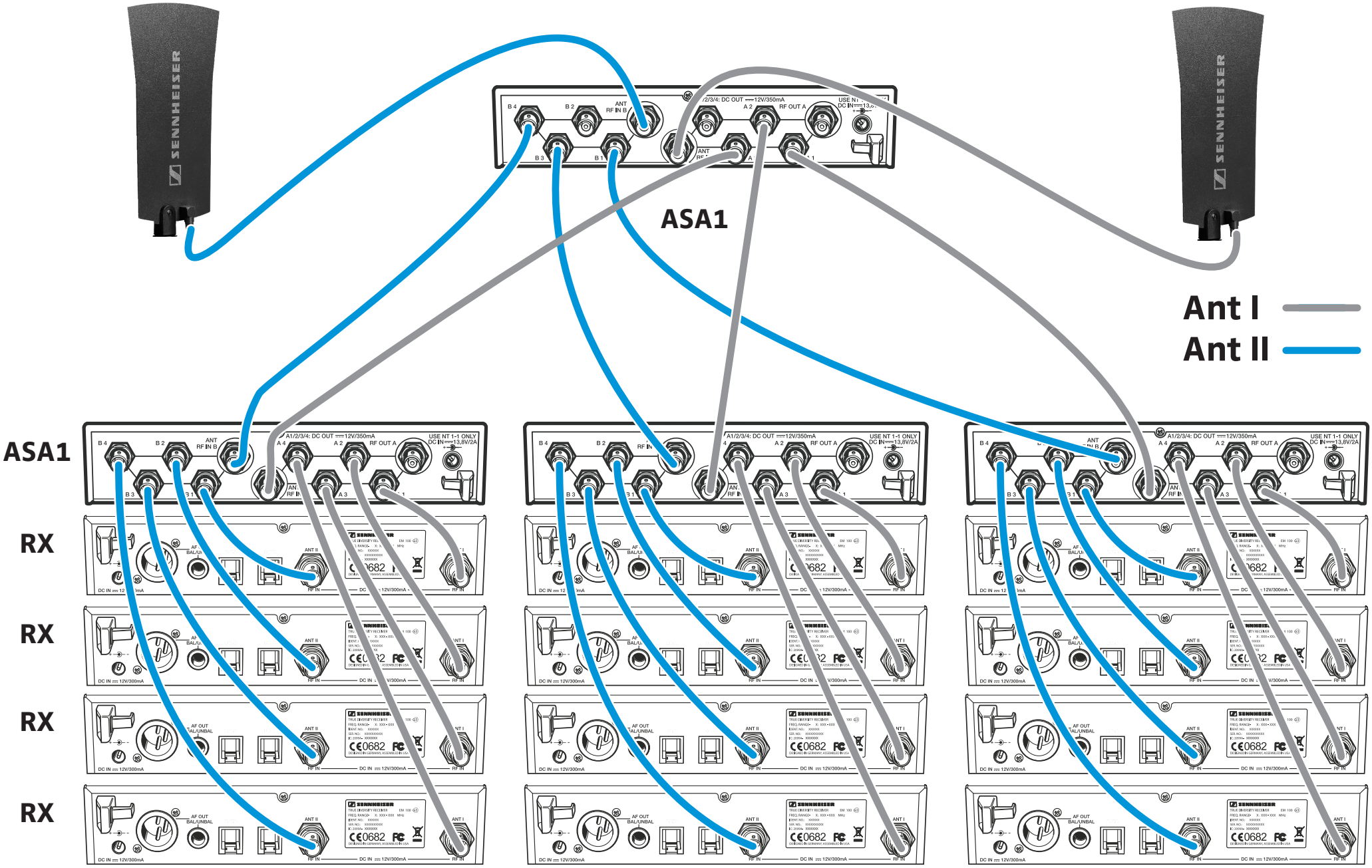12 Channel - Active Splitter
Antenna Splitter Diagram